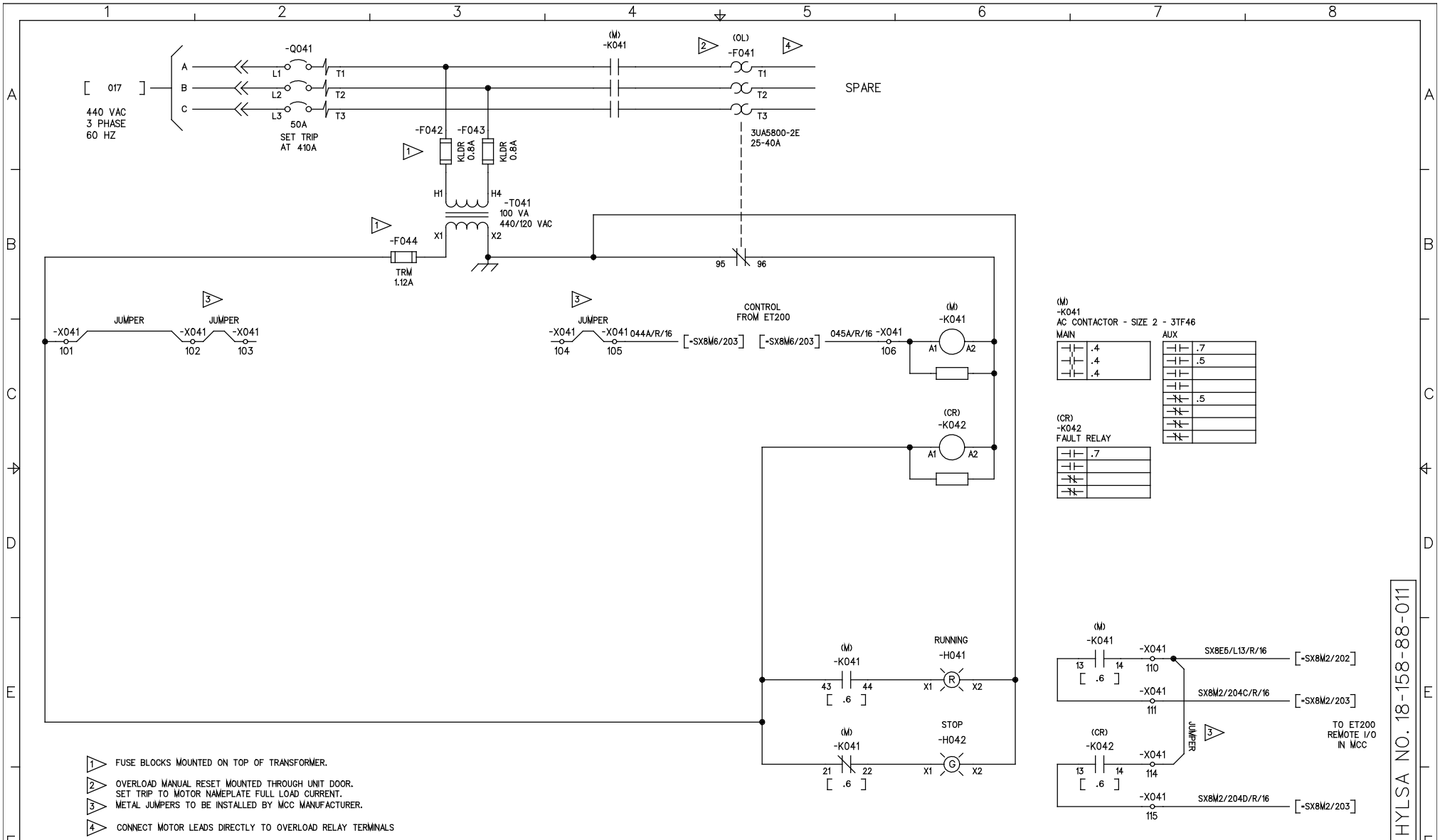

1. FUSE BLOCKS MOUNTED ON TOP OF TRANSFORMER.
2. OVERLOAD MANUAL RESET MOUNTED THROUGH UNIT DOOR. SET TRIP TO MOTOR NAMEPLATE FULL LOAD CURRENT.
3. METAL JUMPERS TO BE INSTALLED BY MCC MANUFACTURER.
4. CONNECT MOTOR LEADS DIRECTLY TO OVERLOAD RELAY TERMINALS

HYLSA NO. 18-158-88-011

ISSUE	DESCRIPTION	DATE	DRAWN	ENGINEER	CHECKED
01	AS RELEASED FOR MANUFACTURE	09/15/93			
02	AS MANUFACTURED AND TESTED	02/25/94			
03	AS COMMISSIONED	03/31/95			

HYLSA SA de CV
MONTERREY, MEXICO
CSP HOT STRIP MILL
INITIAL RELEASE DATE: 05/25/93 PLOT DATE: 07/26/02

SIEMENS
ENERGY & AUTOMATION, INC.
PROCESS INDUSTRIES DIVISION
100 TECHNOLOGY DRIVE
ALPHARETTA, GA. 30005

COILER AUXILIARY ELECTRICAL ROOM
COILER MCC
440 VAC CONTROL POWER SUPPLY
MCC #7

CONFIDENTIAL PROPERTY OF
SIEMENS ENERGY & AUTOMATION, INC.
ALL RIGHTS RESERVED

=RL7.E2
+R1F.5

S123021-S=RL7.E2

Sh.No.04
Cont. 05